# Calculate perimeter

**1** Calculate the perimeter of each shape.

a)

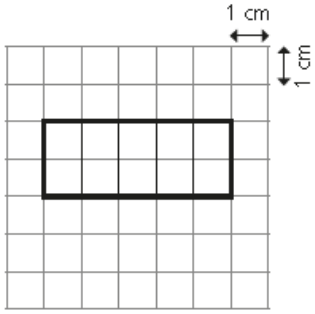


c)

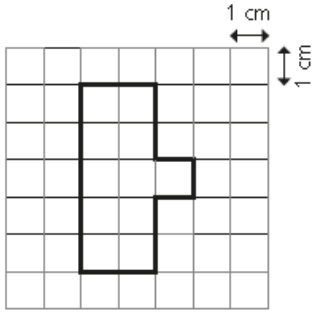


b)

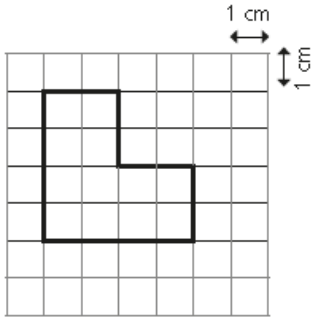


d)

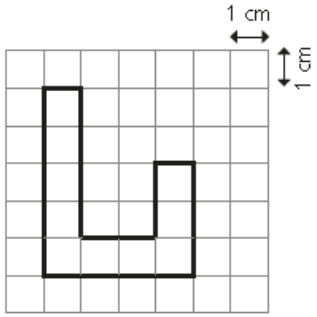


**2** Calculate the perimeter of these shapes.

a)

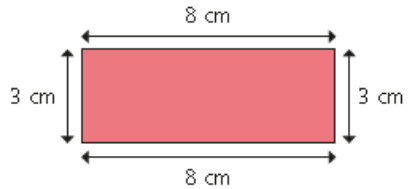


b)

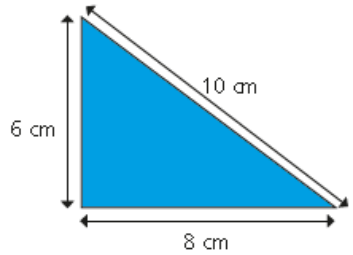


**3** Calculate the perimeter of these shapes.

a)

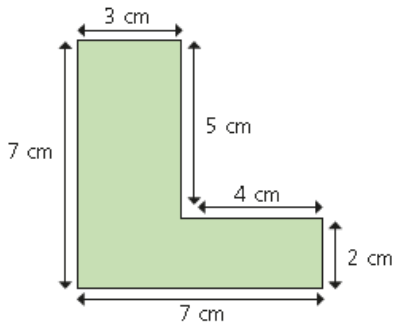

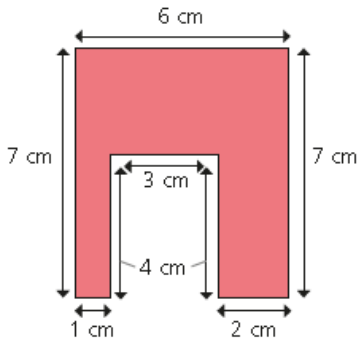
b)